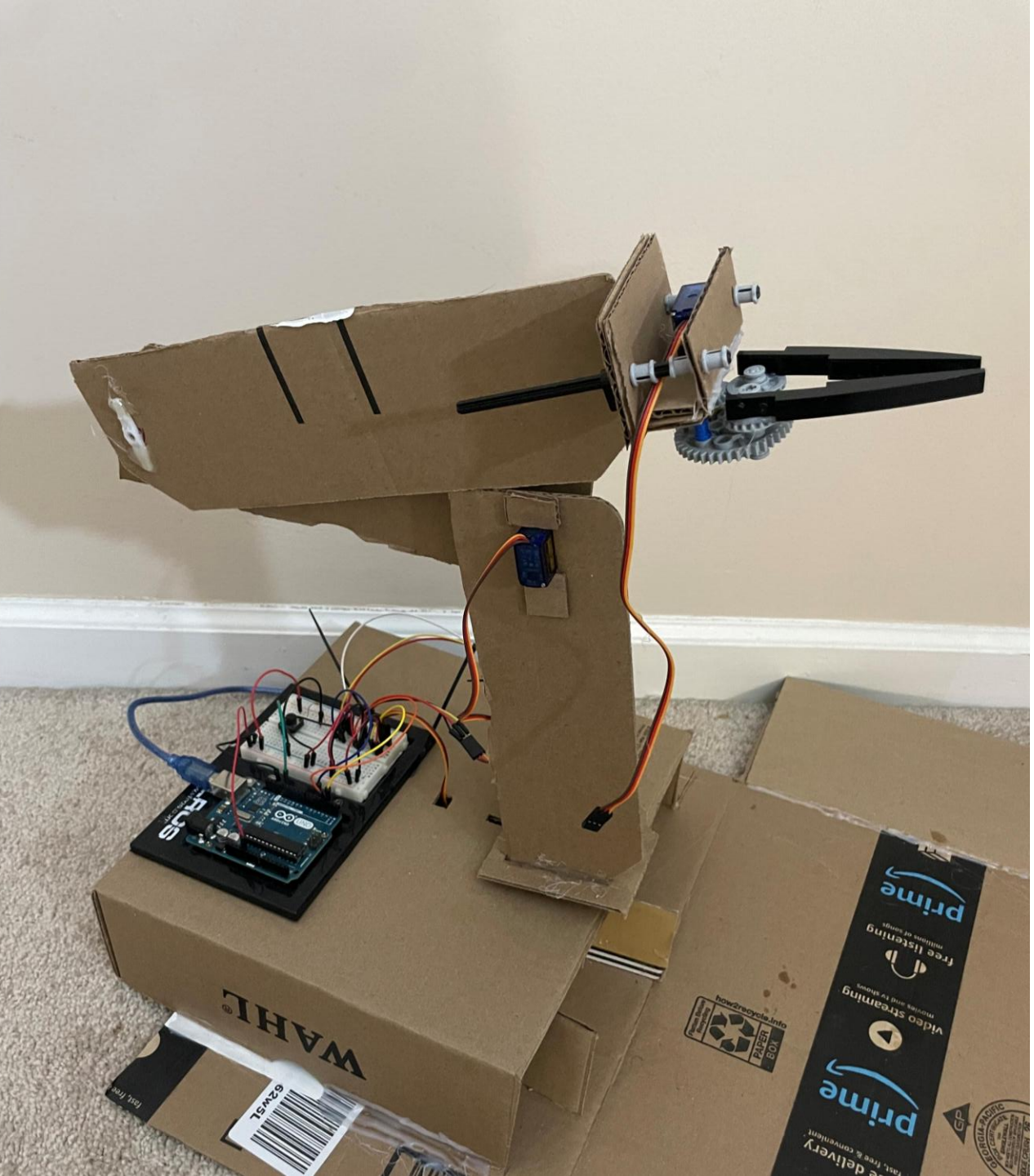

Autonomous Operation Robot

Purpose

- Allows for computers to classify in a similar way to humans
- Computer vision has wide applications

Mechanical Considerations

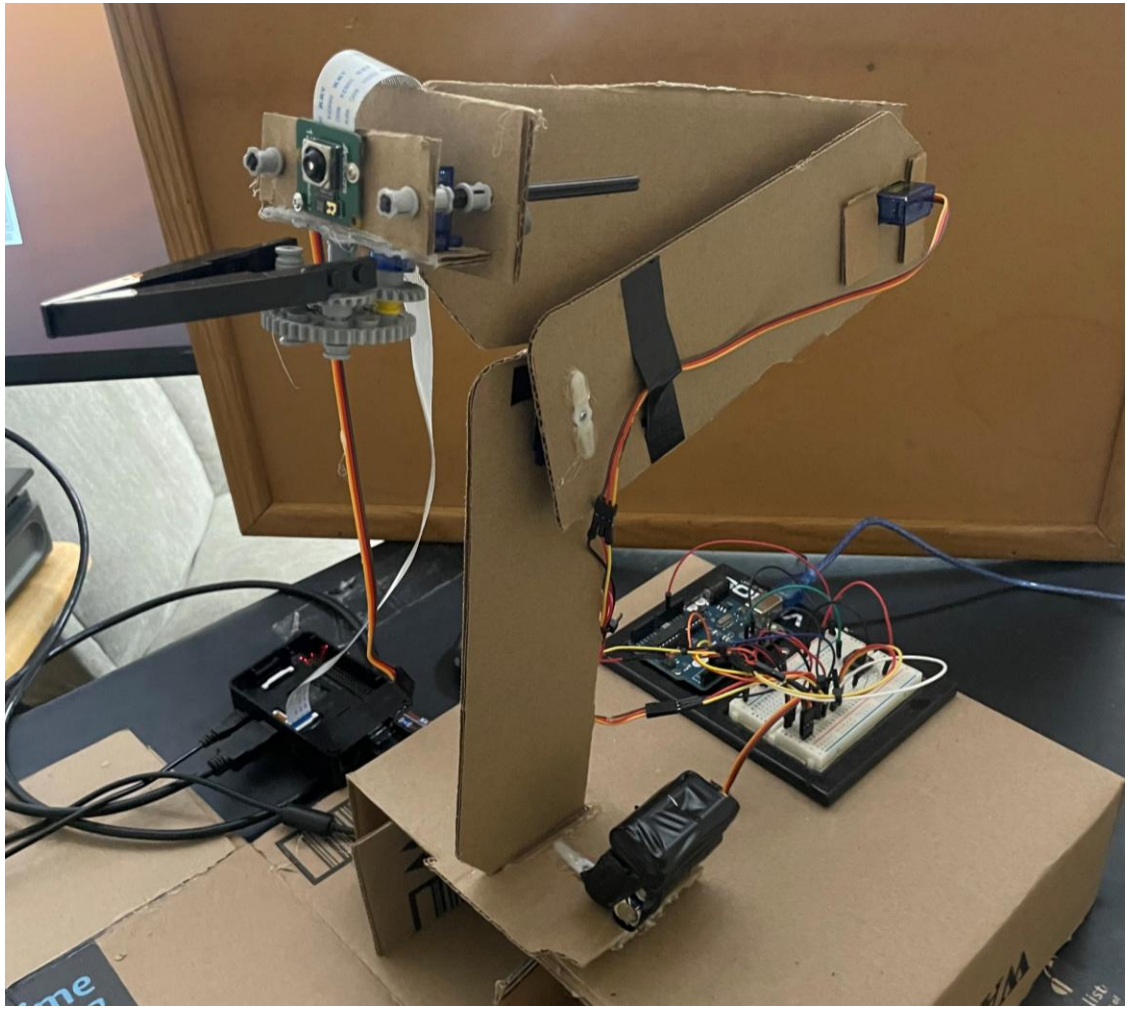

- Cardboard is cheap, lightweight, strong enough and easily manipulated
- Servos are cheap, powerful and easily controlled
- Counterweights
- Reinforcement around servos
- One servo for end effector

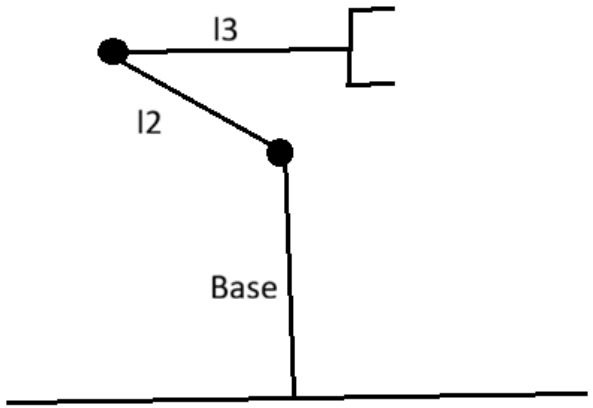

Electrical Diagram

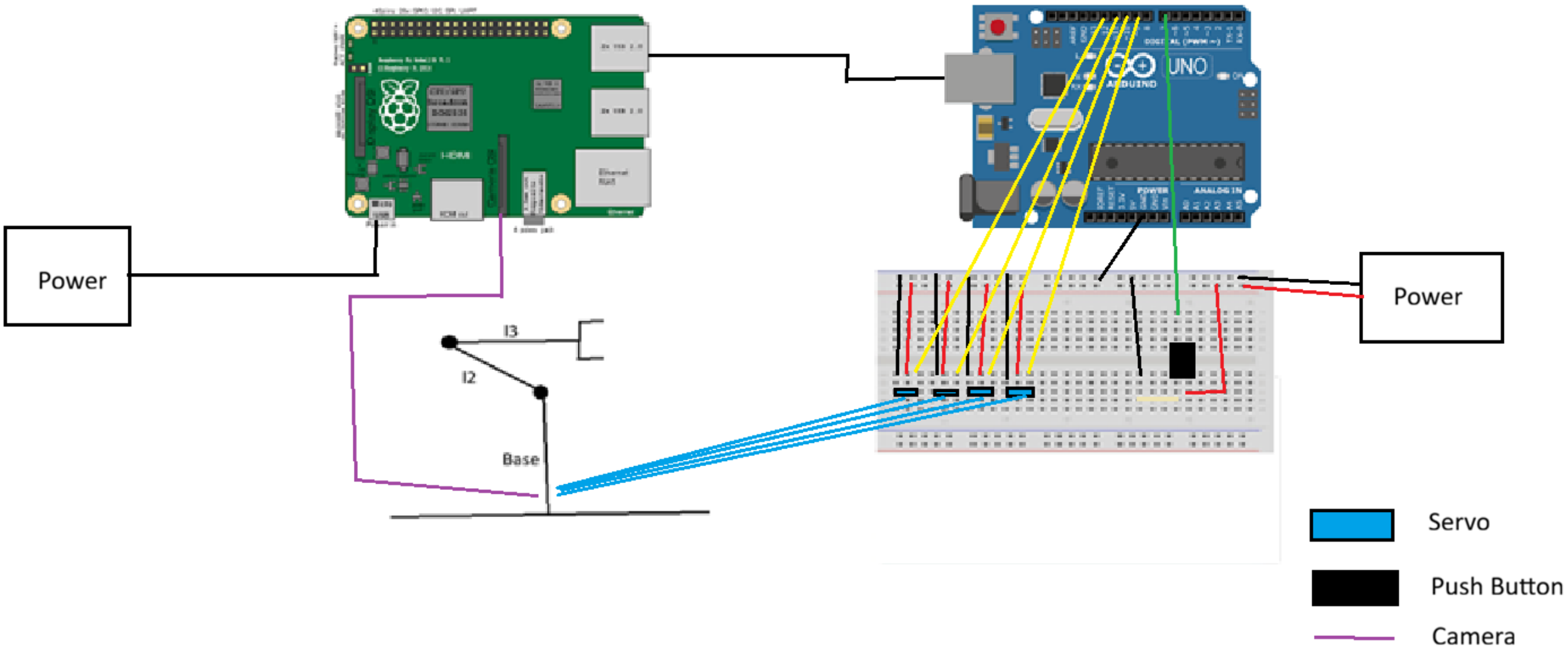

OpenCV

Considerations

- Must be in grayscale
- Can only Identify one at a time
- Training object must be exact size

Control Algorithm

Identify
- Identify Location of Object

Align
- Use Forward and Reverse Kinematics to Align With The Object

Grasp
- Lower arm and Grasp Object

Remove
- Move Robot to Dedicated Drop Off Area

Conclusion

- Designed 3-link robotic arm
- Programed Object Identification with OpenCV
- Determining Robot Kinematics Based Object Position